CUBE QUEST

Operation and Service Manual

SIMUTREK

COPYRIGHT 1983
by SIMUTREK INCORPORATED
ALL RIGHTS RESERVED
925 East Brokaw Road
San Jose, CA 95131
(408) 291-2000

TABLE OF CONTENTS

OPERATOR SETUP PROCEDURE..... 1.0

OPERATOR OPTIONS..... 2.0

Test Mode..... 2.1

Hardware Diagnostics..... 2.2

Coinage Settings..... 2.3

Free Play..... 2.3

Parameters..... 2.4

Bonus Settings..... 2.5

Coin Audit Totals..... 2.6

Game Audit Totals..... 2.6

Bonus Audit Totals..... 2.6

Cubic History..... 2.6

TECHNICAL INFORMATION SECTION

System Block Diagram..... 3.0

Functions of PC Boards..... 3.1

Schematics:

Mother/Sounds PC Board..... 4.0

Rotate/Video PC Board..... 4.1

Line Drawer PC Board..... 4.2

Fill PC Board..... 4.3

EPROM PC Board..... 4.4

1/0 PC Board..... 4.5

Audio Power Amp PC Board..... 4.6

Harnessing..... 4.7

Assembly Diagrams:

Mother/Sounds PC Board..... 5.0

Rotate/Video PC Board..... 5.1

Line Drawer PC Board..... 5.2

Fill PC Board..... 5.3

EPROM PC Board..... 5.4

I/O PC Board..... 5.5

Audio Power Amp PC Board..... 5.6

Game Cabinet..... 5.7

Part Lists:

Mother/Sounds PC Board..... 6.0

Rotate/Video PC Board..... 6.1

Line Drawer PC Board..... 6.2

Fill PC Board..... 6.3

EPROM PC Board..... 6.4

I/O PC Board..... 6.5

Audio Power Amp PC Board..... 6.6

Harnesses..... 6.7

Miscellaneous..... 6.8

POWER SUPPLY INFORMATION..... 7.0

CUSTOMER ASSISTANCE

WATS Line Telephone Number..... 9.1

Service Publication Mailing List..... 9.1

GENERAL SPECIFICATIONS..... 9.1

OPERATOR SETUP PROCEDURE

After removal from the shipping carton, please inspect the game thoroughly, both inside and outside, to be sure there has been no shipping damage, and that all internal assemblies remain secure. Then follow the procedure below.

1. Remove the back door.

1. Disconnect the shipping straps securing the video disk player.

3. Carefully slide the disk player platform as far out as it will go.

4. Skip steps 5, 6 and 7 if you have purchased an upright model without a seat.

5. Disconnect the wiring harnesses from the disk player, noting where they are plugged into the player. Lift the player up off its mounts, and set it safely aside.

6. Mount the seat assembly, making sure to connect the wiring harness in the seat assembly before bolting the seat onto the cabinet.

7. Reconnect the wiring harnesses to the disk player, and reinstall the player on its mounts.

8. Apply proper AC power to the game cabinet, and pull the interlock switch out to the service position.

9. Turn on the disk player power switch.

10. Press the EJECT (OR REJECT) button on the disk player. This may need to be done more than once, in order to unlock the top lid of the player.

11. Lift the top lid of the player.

12. To prevent possible damage to the internal mechanism of the disk player during shipment, a shipping screw is placed beside the center shaft at the factory (see Fig. 1). It is necessary now to remove the screw, together with the screw plate below it. Next, remove the gray lens cap which is placed over the lens (just to the right of the center shaft) to protect the lens from dust and dirt during shipment. (see Fig. 1).

    NOTE: Store the shipping screw, plate, and lens cap with the operating instructions in case the player has to be moved or shipped again.

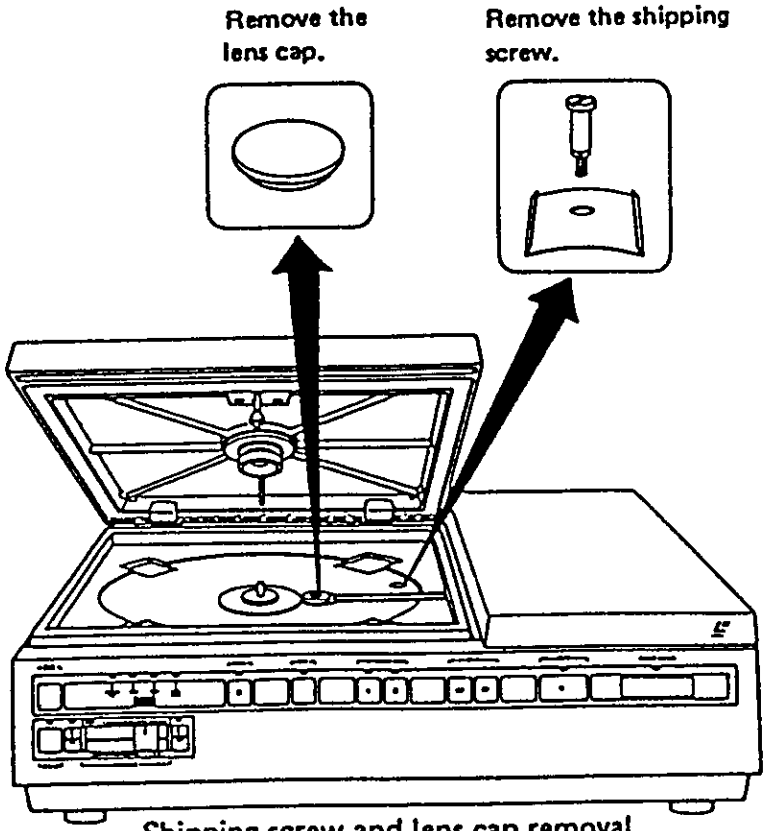

Shipping screw and lens cap removal

FIG. 1

13. Install the laser disk on the turntable, making sure you put the correct side down.

14. Close the player lid, pressing down until it clicks shut.

15. Slide the player back into position in the cabinet, and reconnect the shipping straps, but do not tighten them. Leave them loose enough for the shock mounts to function properly.

16. Reinstall the back door of the cabinet.

17. The game should now be ready to play. After applying power, give the game time to warm up and reset both the real-time hardware and video disk. This usually takes less than a minute, but can take as long as two.

18. To make any adjustments, check or change coinage settings, or run hardware self-diagnostics, refer to the section on the TEST MODE.

NOTE: During initial seconds of power-up and some sections of the TEST MODE there will be garbled audio and video. This is normal and acceptable, unless it lasts longer than a few seconds.

If at any time the game needs to be moved any distance, or shipped anywhere, you MUST be sure to do the following to protect the disk player and disk:

1. Apply power to the player to open the top.

2. Remove and separately package the video disk.

3. Reinstall the objective lens cover, and the shipping screw and plate.

4. Close the top of the player and turn off game power.

5. Tighten the shipping straps securing the player, so it can't bounce around on the shock absorbers during shipment.

After the move or shipment, repeat the original setup procedure.

OPERATOR OPTIONS

CUBE QUEST allows the operator or distributor to make use of the following options:

- Hardware diagnostic programs
- Programmable coinage settings
- Programmable game play parameters
- Programmable bonus settings
- Coin audit totals; timed (i.e. short term accounting)
- Coin audit totals; permanent (i.e. long term accounting)
- Game (play) audit totals; timed
- Game audit totals; permanent
- Bonus audit totals; timed
- Bonus audit totals; permanent
- Top ten high score history
- Free play mode
- Free credit switch (for individual free games while in normal play mode)

More detailed information concerning these features can be found in the section titled TEST MODE.

TEST MODE

The TEST MODE is the key to a host of valuable tests, adjustments, and accounting functions available in Cube Quest. Just press the TEST switch, and the TEST MODE begins.

Now you can use the RIGHT SIDE FIRE BUTTON on the game control panel to step through the various sections of the TEST MODE in sequence. You may elect to execute or bypass whichever sections you choose, and you may use the LEFT SIDE FIRE BUTTON to step backward to a section you may have passed.

Each time the FIRE button is pressed you are presented with a list of individual functions which are then currently accessible. For example, under HARDWARE DIAGNOSTICS there are:

Alignment Test	ROM Test
Color Bar Test	RAM Test
Switch Test	Sound Test
Battery Reset Test	Disk Test

Now you may select from among these items, by pressing the CUBE BUTTON. The item selected will change color (from white to green). Each time you press the CUBE button, the next item will be selected. Should you choose to execute any of the "tests" shown (or access any information or settings indicated),simply press the TEST button again. After executing one of these functions, you may get back to the list (or menu) of items by once more pressing the TEST button.

In selections where your purpose is to alter settings, such as coinage, you use the TRACKBALL to change the number which you have selected with the CUBE button.

In selections that are purely informational, such as auditing functions, you have available two types of information; timed and permanent. This means that the game records statistics both since the last time the figures were purposely reset and also since the game was first powered up (or the last time there was a battery failure). In effect this gives you both short term and long term information about the play of the game simultaneously.

The following pages describe some of the things you should know about the individual sections of the TEST MODE.

In summary, uses of the controls in the TEST MODE are:

TEST switch	- Used to start TEST MODE, start and stop selected tests.
RIGHT FIRE button	- Used to step FORWARD through test categories.
LEFT FIRE button	- Used to step BACKWARD through test categories.
CUBE button	- Used to select individual tests.
TRACKBALL	- Used to change settings.

HARDWARE DIAGNOSTICS

These tests allow the operator or technician to easily determine the existence and nature of any hardware failure. Use CUBE button to select test. Use TEST button to execute.

ALIGNMENT TEST

PURPOSE: To align video from disk and real-time hardware to same position on screen.

REMARKS: The white lines are generated by the video disk. The red lines are generated by the real-time hardware. Using the red lines as a reference, adjust the horizontal position of the white lines to match the position of the red lines. Use Pot R50 on the Rotate/Video board (Horizontal Phase Adjustment).

COLOR BAR TEST

PURPOSE: To match colors between disk and real-time hardware video.

REMARKS: Center rectangular area is generated by real-time hardware. Adjust this area first, and use as reference. Red, green, blue and yellow are pure. Be sure that gray scale shades are correct. If adjustment of disk video is necessary, see assembly diagram of Rotate/Video PC Board for location of adjustments.

TINT R30	CONTR R25
COLOR R27	BRIGHT R35

NOTE:
Factory adjustment should be sufficient, even after shipping.
DO NOT ATTEMPT THIS ADJUSTMENT UNLESS ABSOLUTELY NECESSARY!

Should adjustment be required, follow the steps below:

1. Adjust real-time hardware video as mentioned above.
2. Turn COLOR Pot R27 fully CW to eliminate color from disk player video.
3. Using BRIGHTNESS Pot R35, match right side vertical bar of disk video to black of real-time hardware gray scale. Then back off (drop intensity) just slightly.
4. Using CONTRAST Pot R25, adjust the lower left white disk video square for a shade halfway between the two bottom left hardware generated squares.
5. Turn COLOR Pot R27 fully CCW again to turn color on Full.

6. Adjust TINT Pot R30 to match shades of blue squares and violet squares between disk video and the upper row of hardware generated video. The upper row of hardware generated video is 75% saturation, as is the disk video, so they can match closely. The second row from the top of real-time hardware video is brighter (100% saturation) than the disk generated video, and cannot therefore be accurately used to adjust the disk video.

SWITCH TEST

PURPOSE: To test control panel switches, trackball, coin mech switches, tilt (anti-slam) switch, if included, and Free credit switch.

REMARKS: Color change indicates state of switch (OPEN or CLOSED), and of optical sensors on trackball (HIGH or LOW). HEXI-DECIMAL Digits indicate clock and data outputs from trackball (HC=Horizontal Clock, HD=Horizontal Data, VC=Vertical Clock, VD=Vertical Data).

NOTE:
An LED array, located on the I/O PC Board inside the upper coin door, cycles through each segment during this test. Normally, segment #1 indicates battery failure, segment #2 indicates bad coin, segment #3 indicates the game thinks there is no laser disk unit, segment #'s 4 - 9 have no function, segment #10 indicates logic power on.

BATTERY RESET TEST

PURPOSE: To simulate a battery failure in order to reset all options to factory settings.

REMARKS: Text on screen changes color to acknowledge reset.

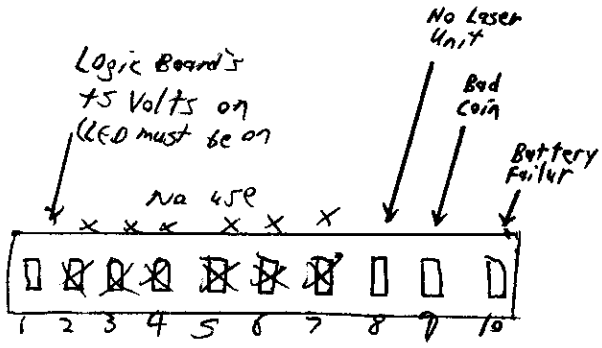

ROM TEST

PURPOSE: Adds up data in all addresses of each ROM to compare to known checksum. Writes "GOOD" if checksum equal, writes incorrect number if not equal. "L" indicates low order byte. "H" indicates high order byte.

ROMS can be located on the EPROM PC Board using following table:

Test Screen Designation	Location on PCB
0	1A
1	1B
2	2A
3	2B
4	3A
5	3B
6	4A
7	4B
8	5A
9	5B
A	6A
B	6B
C	7A
D	7B
E	8A
F	8B

RAM TEST

PURPOSE: Checks all Data Paths, Address Paths, Battery RAM, Game RAM, Rotate RAM.

REMARKS: If any Data or Address Paths are bad, error code is displayed. If any RAM is bad, general location is displayed.

SOUND TEST

PURPOSE: Checks all sound channels for output.

REMARKS: LEFT FIRE button cycles through descending tones, RIGHT FIRE button cycles through ascending tones. Each tone is generated through a separate channel (there are 16 channels). Please observe clarity of tone. Unclear tone may indicate a problem. EVEN channels should come out LEFT speaker and ODD channels should come out right speaker.

DISK TEST

To check laser

PURPOSE: To test all disk access functions, such as Frame seek, high speed search, skip forward, skip backward, and select any disk video desired for display by frame number.

REMARKS: Use the CUBE button to select desired function, use FIRE button(s) to execute. Selected text or numbers change from white to green while selected.

TOGGLE FRAME WINDOW turns on and off a video display of diskframe number currently being viewed.

SEEK TEST causes disk to do high speed search and frame seek continuously until FIRE button is again pressed to halt the test.

SEARCH TO FRAME NUMBER allows you to select a particular frame number for viewing. Use the TRACKBALL to select the desired frame number.

SKIP FORWARD lets you select the number of frames you would like to skip over in a Forward direction, each time you press the FIRE button.

SKIP BACK is the same as skip forward, except in the reverse direction.

NOTE: While disk is searching, text on screen will so indicate, with red word "SEARCHING", located just below words "DISK READY" (in green).

COINAGE SETTINGS

Individual settings are allowed here for Left, Right, and Center (if used) coin mechanisms. In all cases you may set any number of coins (up to 15) for any number of credits (up to 15).

You may also elect for bonus credits if desired, and/or minimum number of coins required for credit.

Use the TRACKBALL for changing numbers, and the CUBE button to select which numbers are to be changed.

FREE PLAY:

Setting ANY "coins" reading to a zero puts the game into the FREE PLAY mode.

If only a few free credits are desired, use the credit switch inside the upper coin door, located next to the TEST switch.

PARAMETERS

In this section of the TEST MODE you are able to change various characteristics of game play. Brief explanations follow:

ITEM	FACTORY SET	REMARKS
Number ships	3	Sets # of ships per player per game
Mutha	3	Sets # of evil creatures per game (only for 3 CUBE)
Cor Sel	1	0 = No time limit to select a corridor 1 = Time Limit
Collision	1	0 = No collisions detected between objects on screen 1 = Collisions detected Purpose is to allow continuous game play (for demonstration or examination) without losing any ships.
Attr Sound	1	0 = No sound in attract mode 1 = Sound
Hardness	3	Higher # = higher difficulty 99 = Special attract feature
Two Cube	1	0 = 3 level Cube only 1 = 2 or 3 level Cube available
Max Bonus	5	Sets # of Bonuses awardable per game (0-5).
Nmbr Cor	5	Sets # of corridors traversed (1-54 before bonus points awarded (5000 p
Disk	1 Resets to "0" if disk player goes bad	0 = Game thinks no disk player attached 1 = Game thinks disk player is attached 2 = Game uses alternate (identical) video track

Use CUBE button to select parameter. Use TRACKBALL to change setting.

NOTE: If disk player is removed or turned off the game will sense that and generate substitute background video, after a two minute "search" for the disk.

BONUS SETTINGS

This section of the TEST MODE allows you to set the scores at which the consecutive bonuses are awarded. The number of consecutive bonuses awardable is set by the "MAX BONUS" setting under "PARAMETERS".

All bonus score settings are settable in increments of 1000 only.

Use CUBE button to select which bonus score is to be changed. Use TRACKBALL to change score setting.

FACTORY SETTINGS ARE:

1st Bonus	25,000
2nd Bonus	50,000
3rd Bonus	75,000
4th Bonus	100,000
5th Bonus	125,000

COIN AUDIT TOTALS (TIMED)

These are readings of the total coins and credits logged on the game since last reset.

Also included are the number of bonus credits awarded (if any) and the ratio of bonuses to credits awarded.

Use TEST button to reset readings.

COIN AUDIT TOTALS (PERMANENT)

Same as "TIMED" COIN AUDIT TOTALS, except these figures are only reset by battery failure, or battery failure simulation test.

GAME AUDIT TOTALS (TIMED)

These are readings of important game play features, such as total time played, average time per game, bonus time played, ratio of time played versus time powered up, total number of bonuses, and total number of tilts.

Use TEST button to reset readings.

GAME AUDIT TOTALS (PERMANENT)

Same as "TIMED" GAME AUDIT TOTALS, except these figures are only reset by battery failure, or battery failure simulation test.

BONUS TOTALS (TIMED)

These are the totals for each number of bonus ships awarded. That is, how many times players have reached 3 bonus ships, or 4 bonus ships, etc.

Use TEST button to reset readings.

BONUS TOTALS (PERMANENT)

Same as "TIMED" BONUS TOTALS, except these figures are only reset by battery failure or battery failure simulation test.

CUBIC HISTORY

These are the ten highest recorded scores and corresponding initials since last reset, battery failure, or battery failure simulation.

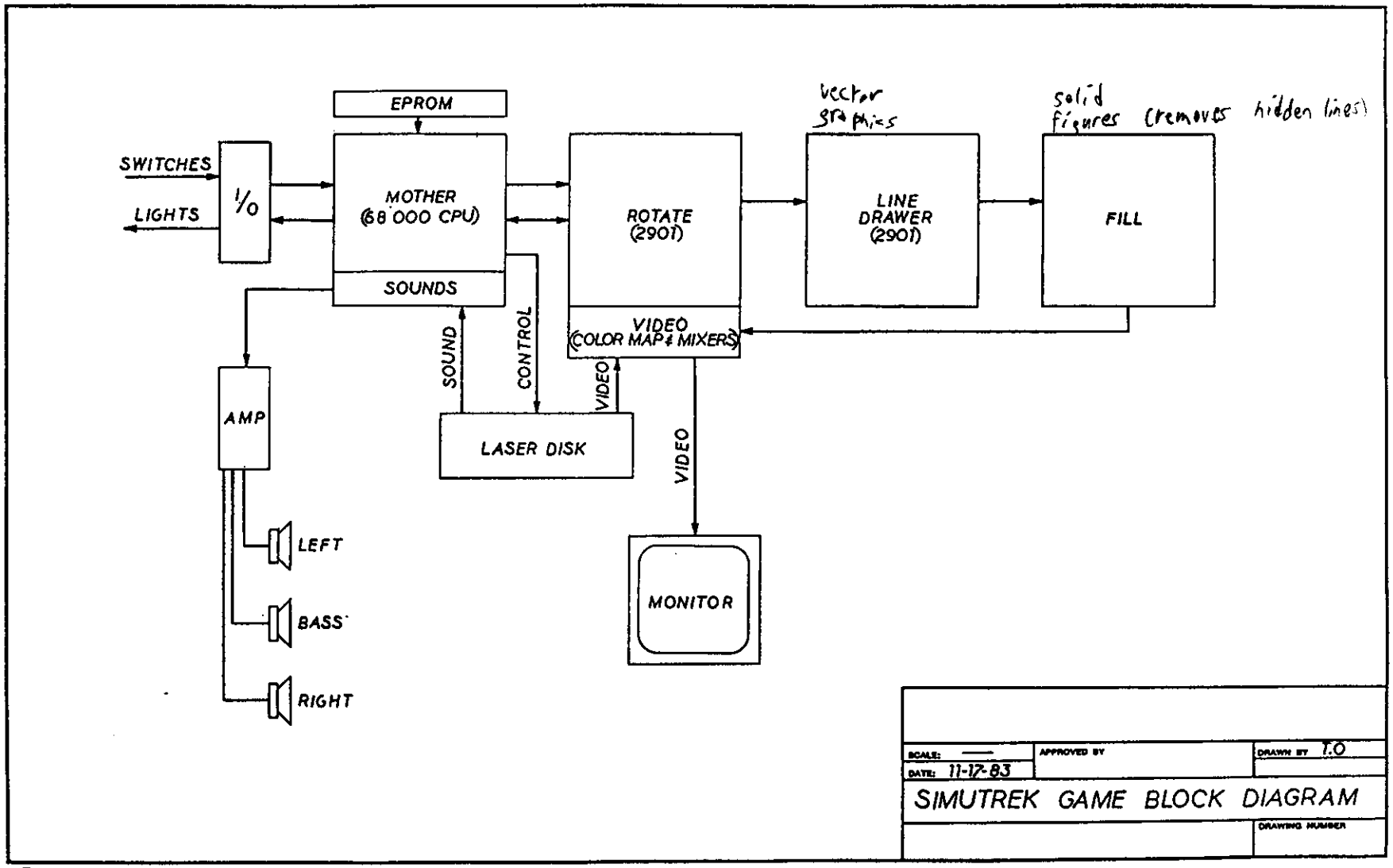
EPROM
SWITCHES
LIGHTS
I/O
MOTHER
(68 000 CPU)
SOUNDS
ROTATE
(2901)
VIDEO
(COLOR MAP & MIXERS)
vector graphics
LINE
DRAWER
(2901)
solid figures (removes hidden lines)
FILL
SOUND
CONTROL
VIDEO
VIDEO
AMP
LASER DISK
MONITOR
LEFT
BASS
RIGHT
SCALE: ——
DATE: 11-17-83
APPROVED BY
DRAWN BY T.O
SIMUTREK GAME BLOCK DIAGRAM
DRAWING NUMBER

FUNCTIONS OF PC BOARDS

MOTHER/SOUNDS Printed Circuit Board

68000 Microprocessor
All sound processing circuitry
I/O circuitry (e.g. buttons,lamps,trakball) (these functions shared w/"I/O bd.)
Laser Disk control interface
Laser Disk sound input (buffer, summer, etc.)
Battery backed RAM

ROTATE VIDEO Printed Circuit Board

Rotate Processor (2901) (1st processor in the real-time graphics chain)
All Video Circuitry:

1. Laser Disk NTSC Decoder
2. Laser Disk "Gen-Lock" Sync Generator
3. Real-time graphics color map (LUT)
4. RGB DAC's (Digital to Analog Converters and Video Mixers

NOTE: If NO real-time graphics, this board is likely problem

LINE DRAWER Printed Circuit Board

(2nd Board in the real-time graphics chain)
Vector Generator
Run Length Encoding (i.e. Start & Stop Point Derivation)

FILL Printed Circuit Board

Does Run Length conversion into actual "painting of the pixels"
Depth Buffer (essentially hidden surface removal)
Consists of four identical subcircuits which alternate every horizontal line (if one is bad, every 4th line will appear bad)

NOTE: Video, in digital form, leaves this board to pass through the color map located on the ROTATE/VIDEO board, then to the DAC's and Video Mixers also located on the ROTATE/VIDEO board.

EPROM Printed Circuit Board

Game Program
Diagnostics Program

I/O Printed Circuit Board

Switch Filters (for FCC requirements)
Trakball Interface (Schmitt Trigger Comparators)
Current Drivers (for lamps in switches, coin counters)

AUDIO POWER AMP Printed Circuit Board

Left channel audio amp
Right channel audio amp
Bass (or center) channel audio amp
Center channel low pass filter